V2 VENT

The Future of Wildfire Defense

BML# FSVSC6120

PRODUCT SPECIFICATION SHEET

FIRESTORM® BUILDING PRODUCTS

Revision Date: September 25, 2026

Model Description
Continuous Soffit

Model Number
FFEC6120SL

Model Size
6" x 120"

Flange Type
Single Leg

NFVA
288 si

Project Notes

WUI VENTS
New Cal Metals, Inc.
3490 Swetzer Rd, Ste 100
Loomis, CA. 95650
LISTING
STATE OF CALIFORNIA
STATE FIRE MARSHAL
SERVICE
CSFM 8165-2426
Rated for wildfire exposure for exterior wildfire exposure in Wildland Urban Interface (WUI)

QAI® US

WILDFIRE / WILDLAND URBAN INTERFACE (WUI) COMPLIANCE

ASTM E2886/E2886M-20 tested
OSFM BML Listing No. 8165-2426 || QAI Listing No. B1155-2
Supports compliance with applicable CWUIC / IWUIC vent provisions
Meets IBHS Wildfire Prepared Home™ performance-based vent requirements

Ventilation Performance: Airflow is a critical component of a building's energy efficiency and health.
Always verify the accuracy of published net free ventilation area figures (NFVA) against your projects specifications!

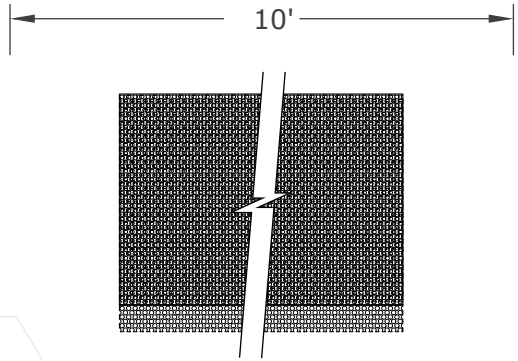

FRONT VIEW

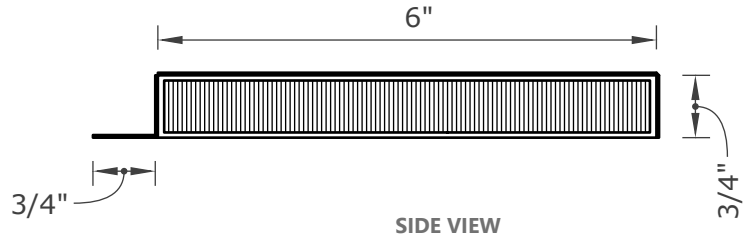

SIDE VIEW

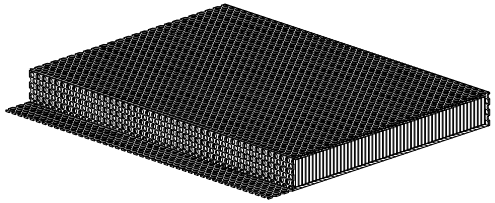

ISO VIEW

WUI WILDLAND URBAN INTERFACE COMPLIANT

Installation

Always measure rough opening to confirm a proper fit. There should be no gaps greater than 1/16" after installation.

Additional waterproofing sealant may be required after installation, along edge of nailing flange, if exposed.

V2 Vents can be painted safely - Ensure metal screens do not clog when painted. Properly prepare galvanized steel before painting - clean with soap and water, micro etching and/or primer before painting.

Required:
Use EverKem 814+ intumescent firestop caulking or equivalent, BEHIND nailing flanges prior to installation.

Material Specifications

Frame & Flange:	**G90 Galvanized Steel - 24GA Perforated**
Intumescent Core:	V2™ Honeycomb Matrix
Ember Mesh:	14 Mesh - 304 Stainless Steel

V2VENTS.COM (916) 652-7424 info@firestormbuildingproducts.com P.O. Box 1126 Loomis, CA. 95650

NEW CAL® METALS INC.

© 2026 New Cal Metals, Inc. All rights reserved. V2 Vent is a product of FireStorm® Building Products, a New Cal Metals, Inc. company.